Taper roller bearings, single row

Principal dimensions			Basic load ratings		Fatigue load limit	Speed ratings		Mass	Designation
			dynamic	static		Reference speed	Limiting speed		
d	D	T	C	C0	Pu				* - SKF Explorer bearing
mm			kN		kN	r/min		kg	-
45	100	38,25	140	170	20,4	4800	7000	1,35	32309 J2/Q

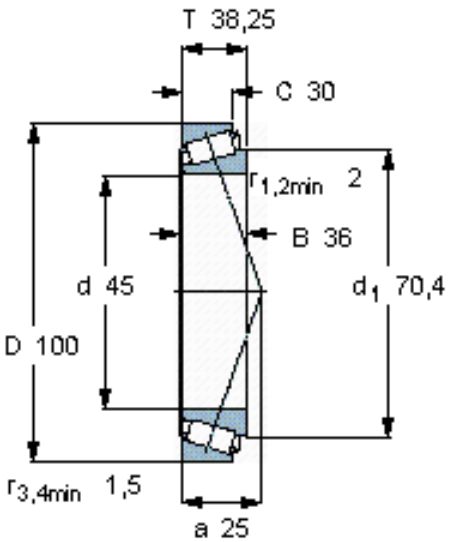

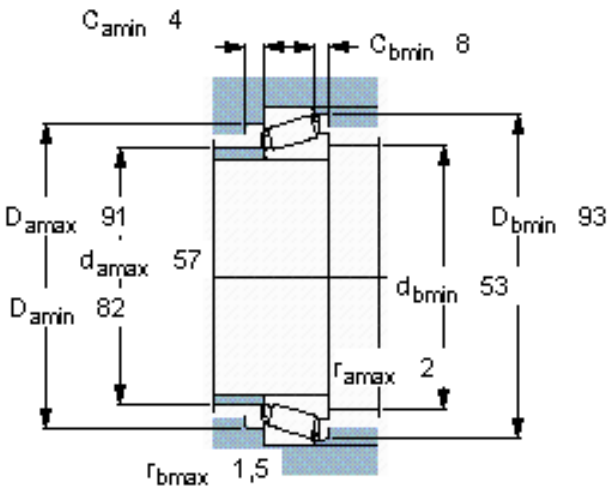

Calculation factors

e 0,35

Y 1,7

Y_0 0,9